Technical Information • Installation Instructions

# Universal Oil Burner EMB 50

## Oil

April 2023 edition

In the interests of continuous product improvement, technical specifications are subject to change without prior notice.

CE

GB

## Contents


1. General information ..... 3
2. Checking scope of supply and electrical ratings ..... 3
3. Operating instructions ..... 3
4. Instruction ..... 3
5. Maintenance and customer service ..... 3
6. Technical specifications ..... 4
7. Functional description ..... 4
8. Air/oil flow schematic ..... 4
9. Installing flange and burner ..... 5
10. Connecting to power supply ..... 5
11. Compressed air connection ..... 6
12. Setting the ignition electrodes ..... 6
13. Control unit ..... 7
14. Table of settings ..... 9
15. Settings for primary airflow ..... 10
16. Combustion air flow rate ..... 10
17. Flue connection ..... 10
18. Flue gas thermometer ..... 11
19. Maintenance ..... 11
20. Wiring diagram ..... 12
21. Possible errors ..... 13
22. Exploded view drawing / parts list ..... 14
23. Burner dimensions / boiler connecting dimensions ..... 16
24. Operating range ..... 16


E.04.2000 • G. 04.04.23

# 1. General information

An oil-fired system must be installed in compliance with a number of regulations and requirements. It is therefore the duty of the installer to be familiar with all applicable regulations and requirements. Installation, start-up and maintenance must be performed with utmost care.
The burner must not be operated in rooms with high levels of air humidity (laundry rooms), dust or corrosive vapours.

**The burner series is certified according to EN 267 for fuel and colza oil.**

**Operation with other combustibles, especially highly combustible liquids as thinner, petrol, alcohol and corresponding composites, as well as brake fluid and antifreeze mixture, is not allowed.**
**Composites made up of high- and low viscosity liquids could separate .**
**Danger of autoignition !**
**Danger of injury !**
**Danger of material damage !**

**The use of flammable liquids with solid-sludge- or water content causes malfunction and breakdowns.The design and degree of protection of the burner make it suitable for operation in enclosed rooms.**

# 2. Checking scope of supply and electrical ratings

Before installing the universal oil burner EMB 50 please check the items supplied for completeness.

Scope of supply:
burner, mounting unit, separate operating instructions, technical information, flange seal.

**Near wear-free compressed air atomising nozzles are pre-fitted at the factory.**

# 3. Operating instructions

This technical information should be displayed in a visible position in the boiler room as operating instructions. It is essential to write the address of the nearest customer service centre in the operating instructions.

**Caution !**
**Improper installation, adjustment, modification, operation or maintenance may result in physical injury or damage to property/equipment. Read the instructions prior to use.**
**This product must be installed in accordance with the applicable regulations (e.g. DIN-VDE).**

# 4. Instruction of operating personnel

Faults are often caused by operator error. The operating personnel must be properly instructed in how the burner works. In the event of recurring faults, Customer Service should be notified.

# 5. Maintenance and customer service

The complete system should be checked once a year for proper functioning and leak tightness by an authorised representative of the manufacturer or by another expert. We accept no liability for consequential damage in cases of incorrect installation or repair, the fitting of non-genuine parts or where the equipment has been used for purposes for which it was not intended.

**Caution!**
**For maintenance and service work, the burner must be switched off!**

E. 04.2000 • G. 04.04.23

# 6. Technical specifications

| | Burner type | |
|---|---|---|
| **Technical specifications** | | **EMB 50** |
| Output, fuel oil<br>in kW<br>in kg/h | | <br>50 - 75<br>4.2 - 6.3 |
| Output, rapeseed oil<br>in kW<br>in kg/h | | <br>40 - 52<br>4.0 - 5.2 |
| Compressor output | $m^3/h$ | 8 |
| Primary air connection | bar | 0.5 - 1.5 |
| Motor output | W | 140 |
| Heating element | W | 1100 |
| Voltage | | 1/N/PE ~50 Hz 220 - 240 V |
| Weight | kg | 25 |
| Noise emission in dB | A | 71 |

# 7. Functional description

The fuel is pumped out of the supply tank and into the burner tank. A float switch controls the level inside the burner tank. Another float switch (overflow protection) serves as a limiter, which switches to fault if the tank is overfilled. A thermostat regulates the oil temperature in the burner tank and starts the burner when the set temperature is reached. Thereafter, the automatic oil burner control system controls and monitors the operation of the burner. Fuel is aspirated and finely atomised by a special nozzle using the compressed air flowing through the burner, which is used as primary air for the combustion process.The burner blower supplies the secondary air which is added to the atomised spray at the baffle plate. This ensures full combustion and operational reliability.At the oil temperature in excess of 150° C, the safety switch automatically de-energises the burner.

# 8. Air/oil flow schematic

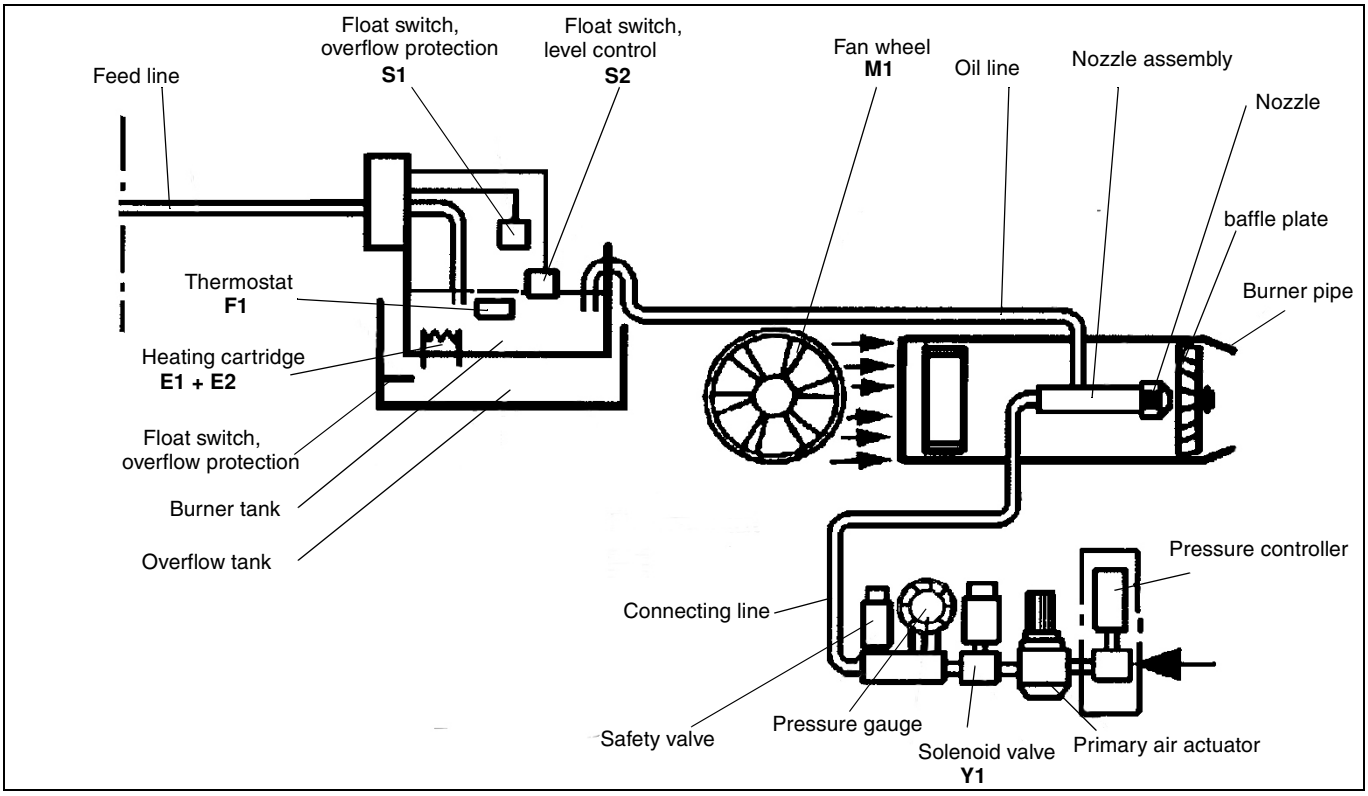


E.04.2000 • G. 04.04.23

## 9. Install flange and burner

Attach the burner flange and the seal to the heat generator.

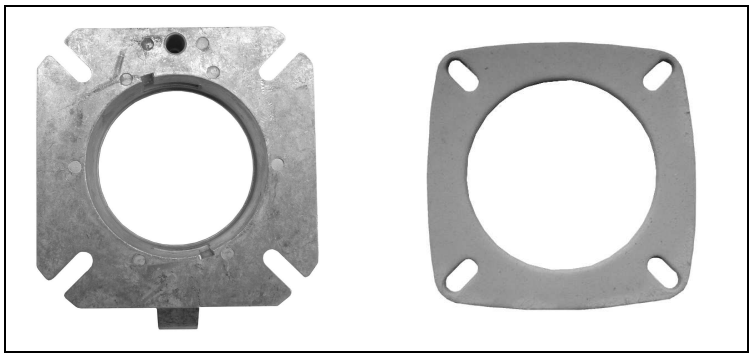

## 10.Connect to power supply

- Connect the burner to the power supply using the supplied connector unit as indicated in the wiring diagram.
- HEED LOCAL REGULATIONS !
- gg Use flexible wiring.

### Overcurrent protection configuration

The overcurrent protection devices must be rated for the electrical current range indicated in the technical specifications and to provide protection against electrical shock according to DIN IEC 60364-4-41 (VDE 0100-410).

### Connection diagram

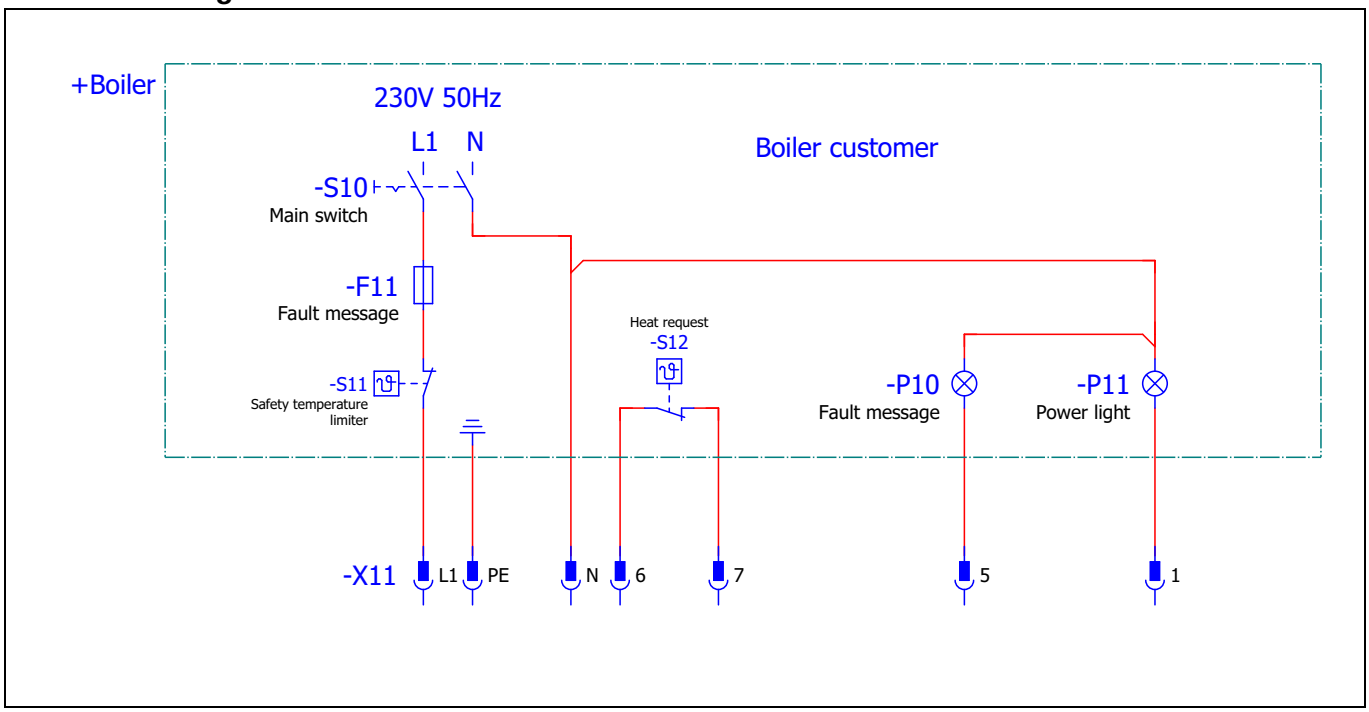

## 11. Compressed air connection

Connect a compressed air line to the pressure regulator (1).

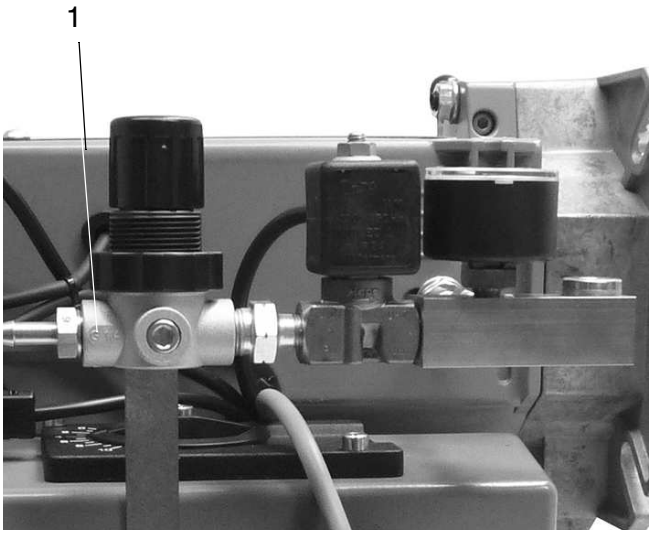


## 12.Setting the ignition electrodes

The ignition electrodes are preset. The specified dimensions (Fig.) are for checking purposes.

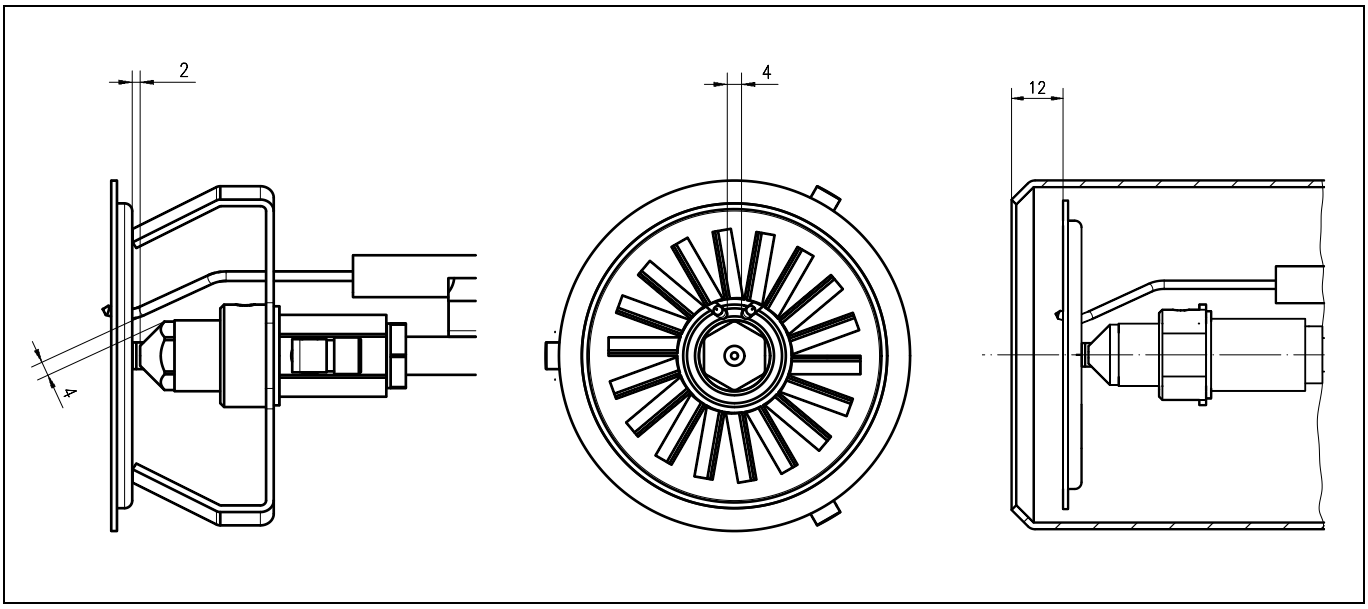

# 13. Function testing the control unit

**Testing the control unit for proper functioning**

**• Danger of fatal injury from electric shocks!**

**Disconnect electrical cable from power supply before carrying out any work on live parts! Troubleshooting may only be carried out by authorised and trained personnel! Unlocking may only be carried out by an authorised specialist.**

**When commissioning the plant or when doing maintenance work, make the following safety checks:**

Burner startup with flame detector darkened:

- Lockout at the end of «TSA»

Burner startup with flame detector exposed to extraneous light:

- Lockout after no more than 40 seconds.

Burner operation with simulated loss of flame:

- For that purpose, darken the flame detector during operation and maintain that state

Repetition followed by lockout at the end of «TSA»

**Safety and switching functions**

If a flame failure occurs during operation, the fuel feed shuts off immediately and the system tries a restart, with pre-aeration and retarded ignition. If no flame results, the control box shows a fault after the safety time. The system restarts automatically after an interruption in the power supply. The control box shows a fault if the photo-electric cell detects a light source during the pre-aeration time, after the safety time.

**Display during commissioning**

| Color code table for multi-color signal lamp | | |
|---|---|---|
| **Status** | **Color code** | **Color** |
| Waiting time (tw), other Waiting states | ○..... | OFF |
| Oil preheater is heating | ●..... | Yellow |
| Ignition phase, ignition controlled | ●○●○●○●○●○● | Yellow flashing |
| Operation, flame OK | □..... | Green |
| Operation, flame poor | ○□○□○□○□○□ | Green flashing |
| External light on burner start | □▲□▲□▲□▲□▲ | Green-red |
| Undervoltage | ●▲●▲●▲●▲● | Yellow-red |
| Fault, alarm | ▲..... | Red |
| Fault code output, see fault code table | ○▲○▲○▲○▲○▲○ | Red flashing |
| Interface diagnostics | ▲▲▲▲▲▲▲▲▲▲▲ | Red flickering light |

Key:

..... Permanent
○ OFF
▲ Red
● Yellow
□ Green

**Diagnostics of the cause of fault**

After lockout, the red fault signal lamp remains steady on. In that condition, the visual diagnostics of the cause of fault according to the error code table can be activated by pressing the lockout reset button for more than 3 seconds. Pressing the reset button again for at least 3 seconds, the interface diagnostics will be activated. Interface diagnostics works only if the AGK20… lockout reset button extension is not fitted. If, by accident, interface diagnostics has been activated, in which case the slightly red light of the signal lamp flickers, it can be deactivated by pressing again the lockout reset button for at least 3 seconds. The instant of switching over is indicated by a yellow light pulse.

**Error code table**

| Red blink code of signal lamp (LED) | „AL“ at term. 10 | Possible cause |
|---|---|---|
| 2 x blinks | ON | No establishment of flame at the end of «TSA»<br>- Faulty or soiled fuel valves<br>- Faulty or soiled flame detector<br>- Poor adjustment of burner, no fuel<br>- Faulty ignition equipment |
| 3 x blinks | ON | Free |
| 4 x blinks | ON | Extraneous light on burner startup |
| 5 x blinks | ON | Free |
| 6 x blinks | ON | Free |
| 7 x blinks | ON | Too many losses of flame during operation (limitation of the number of repetitions)<br>- Faulty or soiled fuel valves<br>- Faulty or soiled flame detector<br>- Poor adjustment of burner |
| 8 x blinks | ON | Time supervision oil preheater |
| 9 x blinks | ON | Free |
| 10 x blinks | OFF | Wiring fault or internal fault, output contacts, other faults |

During the time the cause of fault is diagnosed, the control outputs are deactivated burner remains shut down.
The diagnostics of the cause of fault is quit and the burner switched on again by resetting the burner control. Press the lockout reset button for about 1 second (<3 seconds).

## Flame monitor with Flame detector QRB

The flame detector is used for monitoring of burning oil flames and for ignition spark.

Trouble-free burner operation is ensured only when the intensity of UV radiation at the detector’s location is high enough for the detector’s UV cell to ignite during each half wave.

**Operability check:**

A safety check of the flame failure system must be carried out when the appliance is first commissioned and after any inspections or long periods of inactivity.

**Start-up test with flame detector covered:**
After expiry of the safety period, the burner should perform a safety cut-out.

**Start-up test with flame detector illuminated:**
After approx. 20 s of pre-aeration the burner must go over to fault.

**Standard. Startup; if burner in operation, darken the flame detector:**
Attempt startup again, at the end of the safety time the burner must go over to fault.

## 14. Adjustment table

The values given in the table are only setting values for start-up. The system settings required in each case must be redefined if values such as boiler output, calorific value and altitude deviate. **Adjustment is required in any case (due to the system design).**

- For initial start-up, fill the burner tank up to the oil mark by hand.

**Caution !**
If the oil level is too high, the float switch will switch off the burner.
If the oil level is too low, the heating cartridge will become encrusted or damaged.

**Adjustment table for rapeseed oil**

| Burner type | EMB 50 | | | | |
|---|---|---|---|---|---|
| Output in kW | 40 | 44 | 45 | 48 | 50 |
| Oil throughput in kg/h | 4.0 | 4.4 | 4.4 | 4.78 | 4.95 |
| Primary air in bar | 0.8 | 1.0 | 1.2 | 1.4 | 1.5 |
| Secondary air (scale on air damper) | 1.7 | 2.0 | 2.4 | 2.8 | 3.0 |
| Thermostat setting in °C | 140 | | | | |

**Adjustment table for fuel oil**

| Burner type | EMB 50 | | | | | |
|---|---|---|---|---|---|---|
| Output in kW | 50 | 54 | 61 | 65 | 67 | 73 |
| Oil throughput in kg/h | 4.2 | 4.5 | 5.1 | 5.5 | 5.6 | 6.1 |
| Primary air in bar | 0.5 | 0.7 | 0.9 | 1.1 | 1.2 | 1.5 |
| Secondary air (scale on air damper) | 1.8 | 2.1 | 3.0 | 3.3 | 3.8 | 4.0 |
| Thermostat setting in °C | 0° do not heat | | | | | |

The thermostat on the burner tank must be set to between "min." for heating oil EL and 140°C for rapeseed oil, depending on the viscosity of the oil.

E. 04.2000 • G. 04.04.23

## 15. Settings for primary airflow

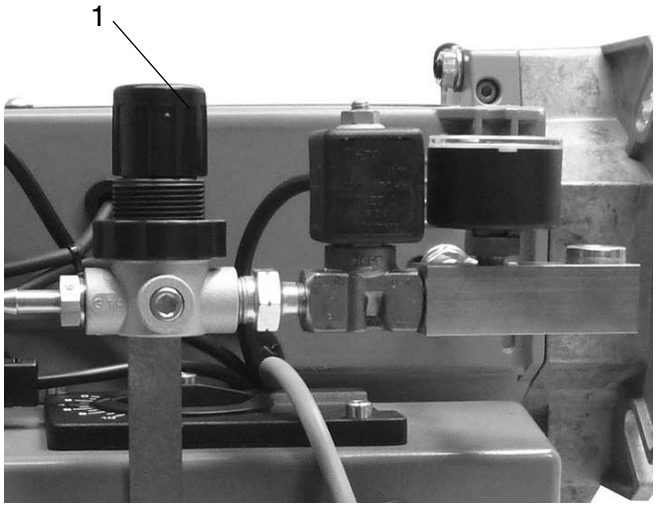


The primary airflow should be set using the pressure regulator (1) according to the required burner output. The information given in the diagram can be used as guide values.
Higher-viscosity fuels require higher air pressures.

## 16. Combustion air flow rate

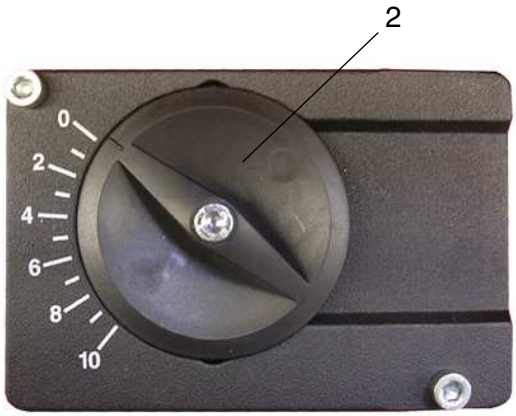


Setting the combustion air flow rate (2).

Ideal values:
- Soot index according to Bacharach <1
- $O_2$ = 4 - 5%

The $CO_2$ values of a commercially available measuring instrument can only be used for processing the combustion process for heating oil EL.

Flue gas temperature according to the operating instructions of the heat generator.

## 17. Flue connection

The prerequisite for perfect operation of the furnace is a correctly dimensioned flue.
Dimensioning is effected in accordance with DIN 4705 in consideration of DIN 18160 and based on the boiler and burner outputs.
For operation on a sliding basis, provide flues as per DIN 18160 part, group 1. The flue gas mass flow of the total rated heat output must be factored into the calculation. The effective flue height is counted from burner level. Furthermore, we refer you to the statutory building regulations of the individual German federal states.
Select a flue design which minimises the danger of condensation or of a cold flue inner wall.

**For exact adjustment and stabilisation of the flue draught we recommend the installation of a draught limiter.**

Thus:

- any draught fluctuations are equalised
- moisture in the flue is largely excluded
- stoppage losses are reduced.

Connection pieces should be introduced into the flue with a gradient of 30° or 45° viewed in flow direction.
It is best to provide flue gas pipes with thermal insulation.

E.04.2000 • G. 04.04.23

## 18. Flue gas thermometer

For flue gas temperature monitoring the heating system should be equipped with a flue gas thermometer. The higher the flue gas temperature, the greater the flue gas loss.
Rising flue gas temperatures indicate increasing deposits that will reduce the degree of combustion efficiency. In the event of an increasing flue gas temperature have the heating installation cleaned and readjusted by a skilled person.

## 19. Maintenance

**Depending on the quality of the oil used, we recommend the following maintenance intervals:**

**After more than 3 days downtime:**

- drain off residual water and sludge through the water drain cock in the burner tank,

**Monthly:**

- Clean the filter in the supply tank or the unit tank and strainer on the floating suction unit
- Remove and clean the feed pump filter
- Remove sludge and residual water from the supply tank or unit tank
- The quantity can be determined by using water indication paste and a gauging rod
- Clean the photocell
- Clean the ignition electrode and baffle plate and blow out the nozzle with compressed air, check the spacing between the ignition electrodes (refer to checking dimensions for ignition electrodes)

**Annually (before or after the heating period):**

- Carry out monthly maintenance as described
- Clean the heating cartridges in the burner tank
- Clean the ignition electrodes and baffle plate, blow out the nozzle with compressed air and check the spacing between the ignition electrodes
- Clean the burner tank, supply tank and unit tank thoroughly.

E. 04.2000 • G. 04.04.23

# 20. Circuit diagram

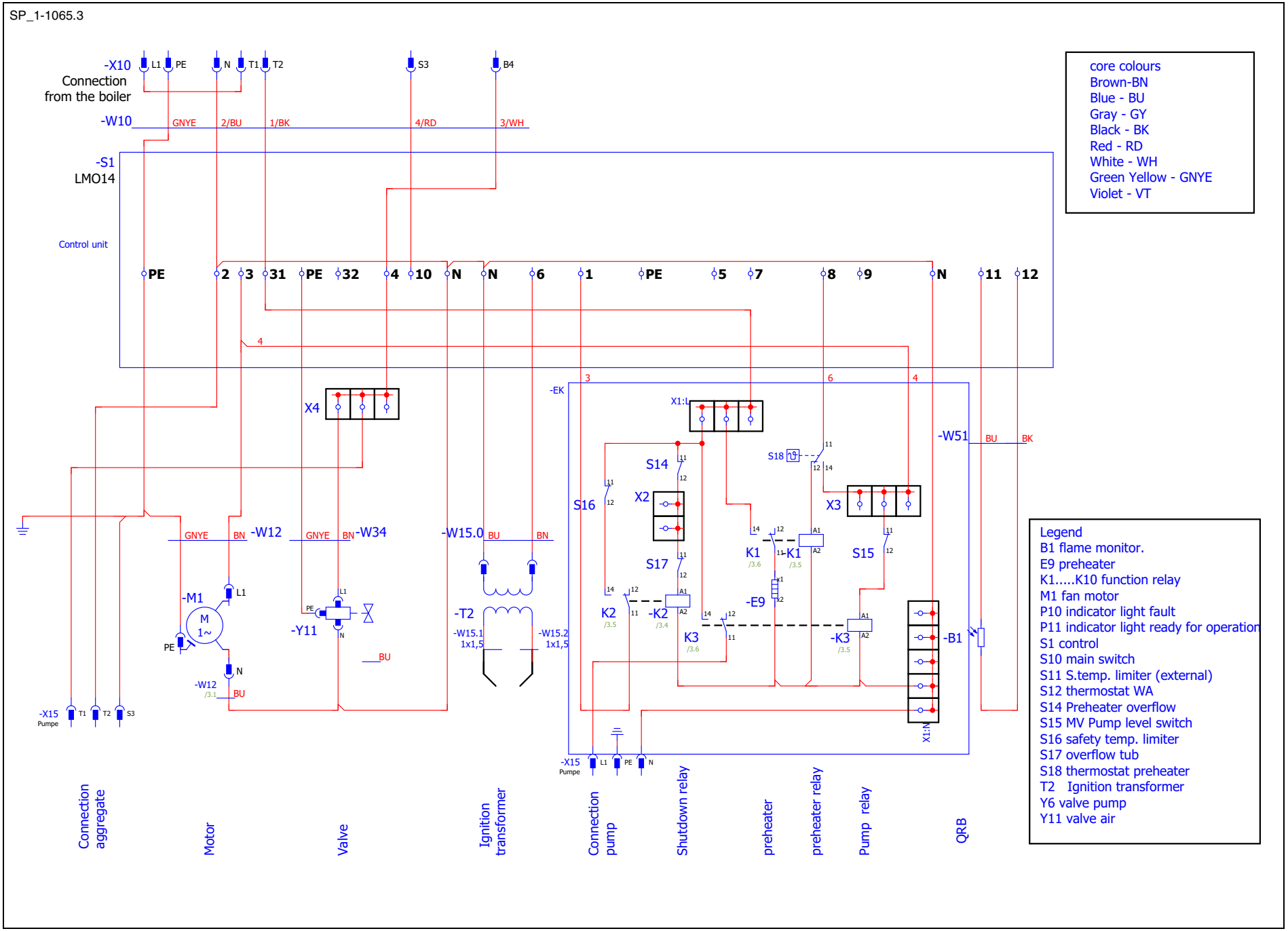

# 21. Troubleshooting

| Observation | Cause | Remedy |
|---|---|---|
| Burner does not start up | Oil not combustible due to sludge and / or water | Open the water drain cock on the burner tank, drain off sludge and water or use a higher-grade heating oil |
| | Oil tank empty | Refill tank with oil |
| | Oil level in burner tank too high | Correct the oil level by draining off oil by means of the water cock (readjust the level control float switch, if necessary) |
| | Filter dirty, oil or air lines leaky | Clean the filter, feed pump filter and lines |
| | Faulty feed pump solenoid valve | Check the feed pump solenoid valve and replace if necessary |
| | Nozzle dirty or faulty | Replace nozzle |
| | Feed pump blocked | Strip the feed pump and clean the gear |
| | No current | Switch on the heater switch |
| | Motor faulty | Replace |
| | Thermostat faulty | Replace |
| | Photocell dirty or not correctly inserted | Clean the photocell, replace it or connect it properly |
| | Control unit faulty | Replace |
| | No ignition | Adjust the ignition electrode, replace the ignition transformer if necessary and check the ignition cable |
| | No compressed air | Connect and/or open the compressed air and set the pressure |
| | Solenoid valve faulty | Replace |
| | Compressor or air line faulty | Replace |
| Burner starts very late | Heating cartridge and thermocouple in burner tank encrusted or faulty | Clean or replace the heating cartridge and thermocouple in the burner tank |
| Burner starts without pre-ventilating | Solenoid valve sticking in open position | Replace |
| No oil feed | Solenoid valve faulty | Replace |
| Flame is interrupted or extinguishes | Oil not combustible due to sludge and / or water | Open the water drain cock on the burner tank, drain off sludge and water or use higher-grade oil |
| | Oil supply used up | Refill tank with oil |
| | Clogged nozzle | Replace nozzle |
| | Dirty feed pump filter | Clean feed pump filter |
| | Oil line to tank frozen | Clean oil lines, and insulate tank and oil line |
| | Supply tank to far away from burner | Install an additional feed pump |
| | Filter or oil lines dirty | Replace filter and clean oil lines |
| | Solenoid valve faulty | Replace |
| | Too much or not enough compressed air | Check compressed air and gauge pressure using primary airflow control |
| | Safety temperature limiter is in the safety position because the heater has overheated | Troubleshoot the heater and unlock the safety temperature limiter |
| | Micro-switch in burner tank cuts out | Adjust the level control float |
| Nozzle and baffle plate are heavily soiled with oil or soot | Incorrect baffle plate setting | Correct the baffle plate setting dimensions |
| | Combustion airflow rate too high or too low | Set the primary airflow rate<br>Set the secondary airflow rate at the air control flap |
| | Boiler room is not sufficiently ventilated | Pay attention to sufficiently large ventilation ports |

E. 04.2000 • G. 04.04.23

# 22. Exploded view drawing / spare parts list

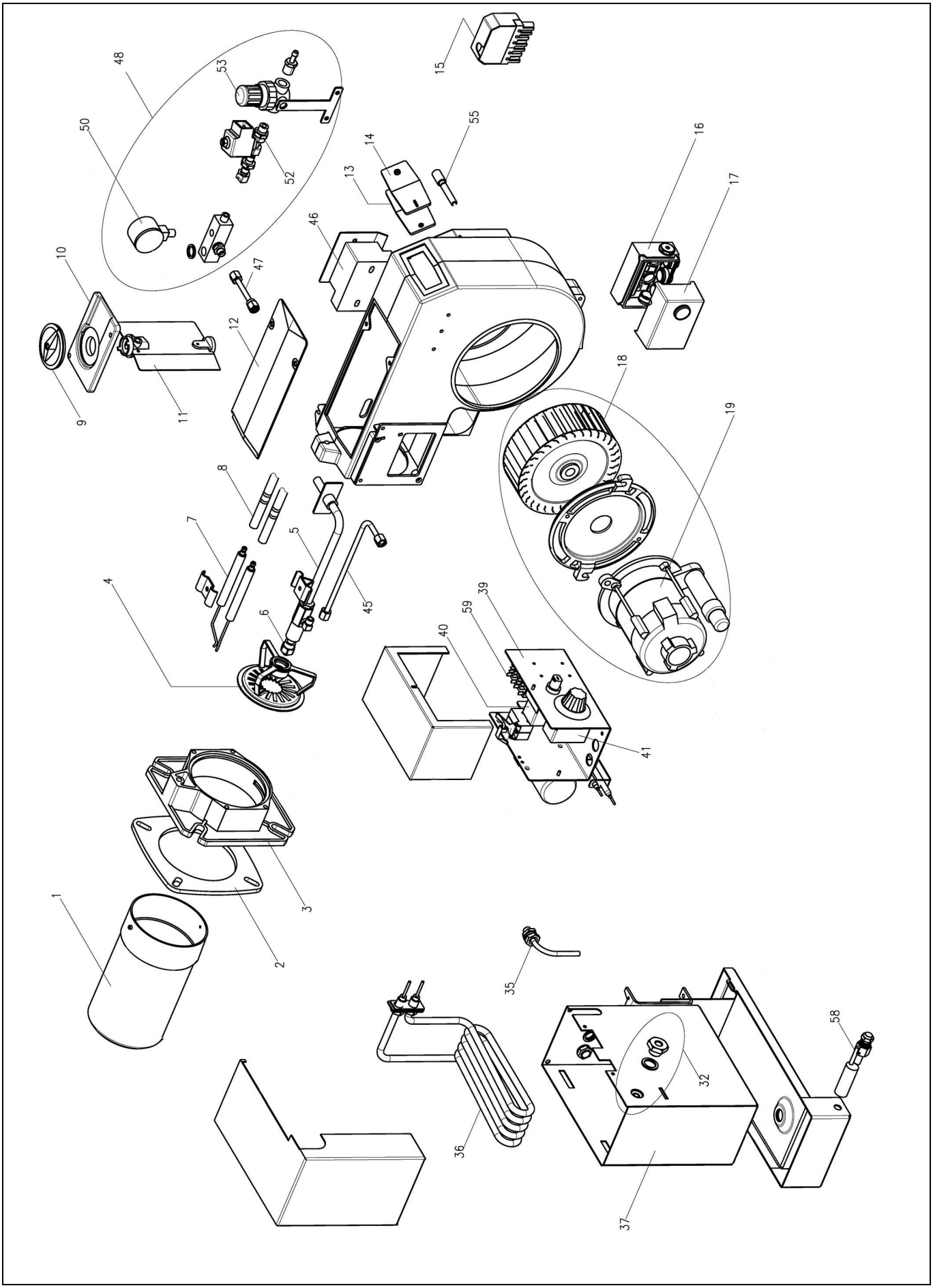


E.04.2000 • G. 04.04.23

| Position | Designation | Pack qty. | Art. No. |
|---|---|---|---|
| 1 | Burner pipe 182 mm long | 1 | 37-90-12112 |
| 1 | Burner pipe 282 mm long (100 mm extension) | 1 | 47-90-29208 |
| 1 | Burner pipe 382 mm long (200 mm extension) | 1 | 47-90-29212 |
| 2 | Mounting flange seal | 1 | 47-90-24429 |
| 3 | Mounting flange | 1 | 47-90-12093 |
| 4 | Diaphragm plate compl. with holder | 1 | 47-90-22839 |
| 5 | Nozzle assembly compl. | 1 | 37-90-11391 |
| 5 | Nozzle assembly compl. 100 mm extension | 1 | 47-90-29210 |
| 5 | Nozzle assembly compl. 200 mm extension | 1 | 47-90-29216 |
| 6 | Delavan HV 2,0 nozzle | 1 | 59-10-50449 |
| 7 | Ignition electrodes (left + right) | 1 | 47-90-26037 |
| 8 | Ignition cable | 1 | 47-90-27621 |
| 8 | Ignition cable 100 mm extension | 1 | 47-90-29242 |
| 8 | Ignition cable 200 mm extension | 1 | 47-90-29243 |
| 9 | Air control handwheel | 1 | 47-90-12100 |
| 10 | Air damper flange | 1 | 47-90-12099 |
| 11 | Air damper compl. | 1 | 47-90-12096 |
| 12 | Housing cover | 1 | 47-90-12095 |
| 13 | Sight glass | 1 | 47-90-12105 |
| 14 | Sight glass cover | 1 | 47-90-12106 |
| 15 | 7-pin socket with cable | 1 | 47-90-11839 |
| 16 | Control unit bottom part AGK 11 | 1 | 37-90-11310-01 |
| 17 | Control unit LMO 14 | 1 | 47-90-26320 |
| 18 | Fan wheel 146 x 52 | 1 | 47-90-12104 |
| 19 | Motor 140 W | 1 | 47-90-27395 |
| 32 | Oil tank connection compl. | 1 | 47-90-27627 |
| 35 | Intake tube compl. | 1 | 47-90-24514 |
| 36 | Heating coil 1100 W | 1 | 47-90-24505-01 |
| 37 | Oil tank EMB 50 | 1 | 47-90-30047-01 |
| 39 | Pre-assembled electrical box | 1 | 47-90-30102 |
| 40 | Safety thermostat | 1 | 47-90-29935 |
| 41 | Flush-type thermostat | 1 | 47-90-29933 |
| 45 | Oil tank - nozzle assembly connecting tube | 1 | 37-90-10287 |
| 45 | Oil tank - nozzle assembly connecting tube 100 mm extension | 1 | 47-90-29211 |
| 45 | Oil tank - nozzle assembly connecting tube 200 mm extension | 1 | 47-90-29214 |
| 46 | Electronic ignition unit Mod. 26/48 | 1 | 47-90-26930 |
| 47 | Air distributor connecting tube | 1 | 47-90-27631 |
| 48 | Air distributor, compl. preassembled | 1 | 47-90-29962-01 |
| 50 | Pressure gauge 0-2.5 bar | 1 | 47-90-12121 |
| 52 | Double reduction nipple 1/4“ - 1/8“ | 1 | 44-90-23075 |
| 53 | Replacement pressure regulator | 1 | 47-90-24594 |
| 55 | Flame detector QRB 4 | 1 | 47-90-29994 |
| 58 | Float switch RK 1015/1 | 1 | 47-90-24506 |
| 59 | Power relay 56.328 | 1 | 47-90-26712-01 |
| - | Folding float switch with mechanical joint, M16x2 | 1 | 47-90-21063 |
| - | Motor cable | 1 | 37-90-11812 |

E. 04.2000 • G. 04.04.23

## 23. Burner dimensions / boiler connection dimensions

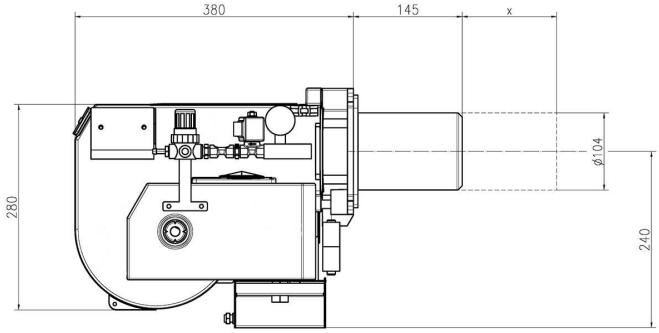


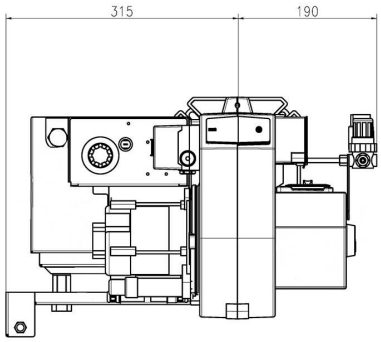


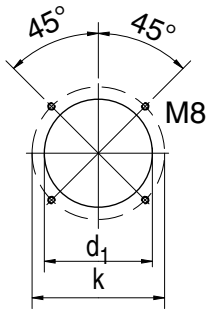


X= Burner tube extension 100 mm and 200 mm

| Burner type | d1 | k |
|---|---|---|
| EMB 50 | 108 | 160 - 190 |

## 24.Working range

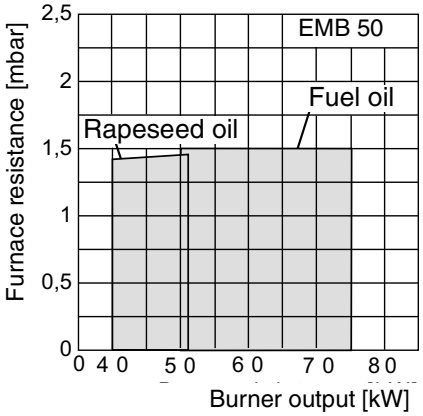


All information in this technical documentation as well as the drawings, photos and technical descriptions placed at your disposal remain our property and may not be duplicated without our written permission given in advance.
Subject to change.

MVZ GmbH • Heizung Sanitär Solar
Kalkwerkstraße 32 • D-71737 Kirchberg a. d. Murr • Telefon 07144/865 99 00•
Telefax 07144/130 56 09 • E-Mail: info@mvz-h.de

04-2023 • Art. No. 70-14-58389-GB • Printed in Germany •