Kroll's Kozy
Waste Oil Heater MTM52 *

*Distributed and supported by Kroll Heaters, Australia, Sales & Service ring 1800 805 243

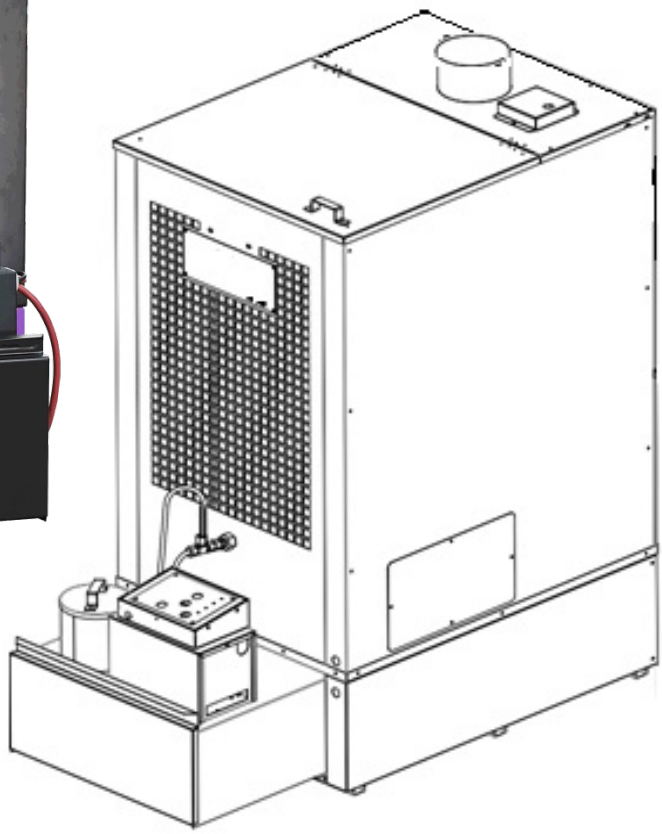

1. Heater intended application and technical data

The universal oil heater type MTM 52 is designed to heat industrial rooms not covered with central heating systems (workshops, car repair shops, industrial shops, warehouses, storage buildings, basements, garages, etc.).

The heater can operate using most waste oils of mineral and plant origin, e.g. engine, gear, hydraulic, fuel oil, with maximal density in temperature of 15°C equal to 860 kg/m3 and with ignition temperature exceeding 56°C.

Please do not use transformer oil as they can contain substances affecting operation and user health

TECHNICAL SPECIFICATIONS:

MTM 52

Minimum heating performance	kW	30
Maximum heating performance	kW	52
Minimum oil consumption	kg/h	2.5
Maximum oil consumption	kg/h	5.2
Heated air flow	m3	5500
Power supply	V/Hz	240/50Hz
Power intake	W	300
Flue diameter	mm	150
Width	cm	60
Height	cm	127
Length	cm	120
Weight	kg	120

* Calorific effect specified for fuel with the following parameters:
- calorific value = 42.6 MJ/kg.
- density at temp. max. 15°C = 860 kg/cm^3.

In case of higher parameters, the calorific effect can be increased even up to 55 kW.

2. Environmental conditions

The universal oil heater type MTM 52 must be stored in the following conditions:

- temperature from -20°C to 85°C
- relative humidity < 85%
- pressure < 1200 hPa
- dust free
- environment free from chemical contamination.

3. Conditions of Use

- temperature from 0°C to 30°C
- relative humidity < 85%
- pressure < 1200 hPa
- IP level IP21
- Noise <70dB

4. Safety Aspects

- It is inadmissible to use fuels other than specified in heading 1. of this manual. In particular, it is forbidden to use such fuels as solvents or petrol
- All activities regarding operation of thedevice must be performed in protective gloves and by a person trained for operation.
- It is prohibited to put hands in the protective grids of the furnace or areas of the operating fan.
- It is necessary to ensure efficient ventilation of the heated room in order to avoid carbon monoxide poisoning.
- While cleaning the device or performing other maintenance activity, the device must be disconnected from power by removing the electrical plug from the power socket.
- When connecting the device to a 240 vac GPO, it must be made sure that the wiring is operational and that it has differential current protection and earthing.

The MTM 52 universal oil heater is powered by 240 vac, 50Hz. It has two bimetallic sensors, ensuring safe and economic operation. The bimetallic sensor located on the heat exchanger closes a contact when the temperature exceeds 40°C and will open the contact when the temperature drops below 35°C. In emergency situations (overheating, oil overflow) the processor checks the bimetallic sensor signal and maintains the fan operation until the furnace has cooled down to temperature below 35°C.
The other bimetallic sensor is the T100 or STB located above the heat exchanger and its opening temperature is 90°C. If STB does open the control panel switches on the Overheating indicator on the front panel.
The heater is also equipped with a weight sensor located under the combustion chamber (i.e.overflow cut-out). When the tank of the cut-out has filled up, the heater automatically switches to the Overflow state, (see point 8. in this Manual).

5. Controller structure

The connection of the heater controlling panel to other system components (sensors, pump, fan) is factory-made. During normal use, due to safety, under no circumstances should there be any interference in the covered part of the heater controller or duct integrity. Any action by an unauthorised person may result in electrocution (240V AC, 50Hz) and burning.

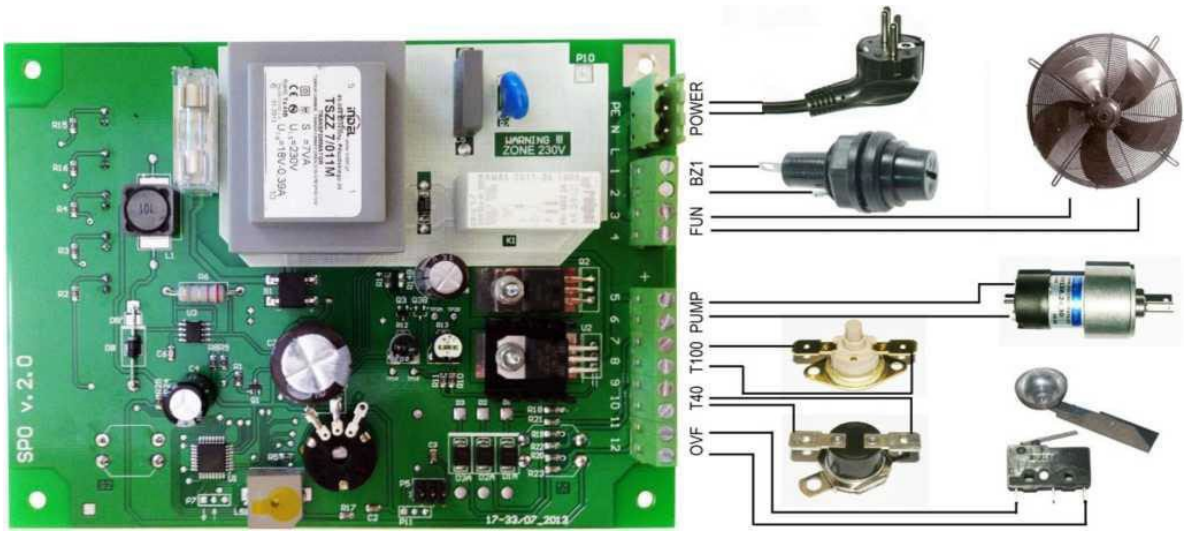

Fig. 1. The connection of the universal oil heater type MTM 52.

6. Installation

- read the local Healty and Safety and fire protection regulations,
- place the heater on a flat, concrete floor, in the spot allowing free space around the device, according to Fig. 2.,
- level the device - in order to check whether the heater is well levelled, place the furnace bowl in the lower part of the combustion chamber and pour a small amount of diesel oil into it - the oil should spill out exactly in the middle of the bowl,
- install the draught regulator on the pipe exiting the combustion chamber to ensure stable draught inside the chamber during heater operation,
- to provide optimal draught, install an at least 5-metre-long smooth, vertical stack pipe resistant to high temperature (not aluminium),
- check the leak tightness of all stack connections sealing with suitable material if necessary,
- make sure that the combustion bowl is located in the combustion chamber centrally,
- place the deflector inside the combustion chamber according to Fig. 3.,
- check the network voltage (240V/50Hz) and connect the heater to the power supply. Neither the fan nor the pump should start because the heater is not switched on yet and no heat has been produced.

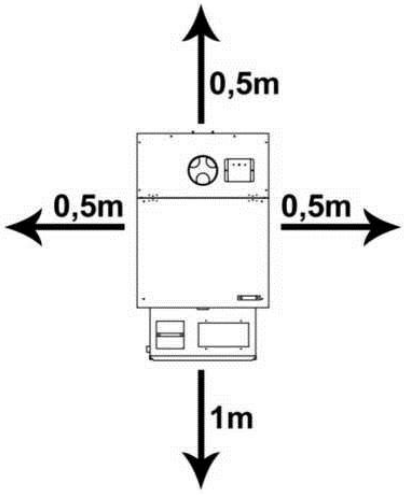

Fig. 2. Minimal safety space around the device .

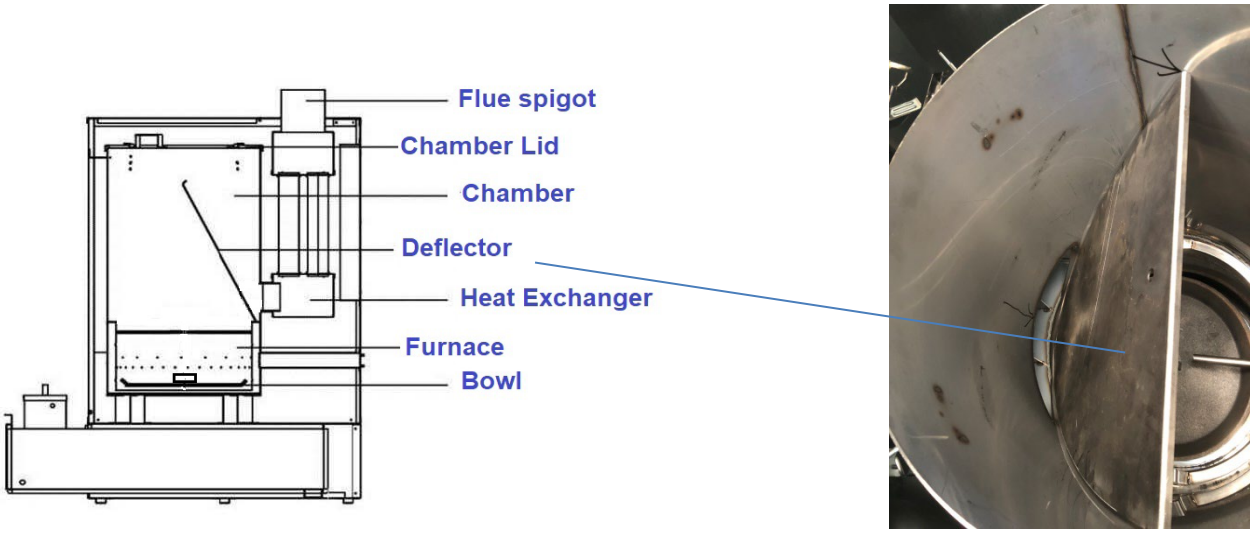

Fig. 3. Combustion chamber structure, profile left; Top view right, shows deflector position

7. Flue installation

The flue spigot of the MTM 52 heater must be capped with the draught regulator (which is a part of the standard heater equipment) in the vertical position so that the exhaust fumes outlet is directed upwards. The stack must be installed into the exhaust fumes outlet of the draught regulator.

To ensure proper combustion, the flue system must be installed properly. The following should apply:

- pipe diameter: 150 mm,
- use the drop separator so that the condensate can leave the stack duct without damaging the pipe exchanger.
- check the tightness of the flue sections
- minimal stack height is 5 metres,
- wind should freely fan the stack cowl from all directions
- if possible, all stack sections should be vertical - horizontal sections should be avoided as well as stack pipe bends. If they are necessary (e.g. two bends if the pipe runs through a wall or a window), the maximal bend angle equals 45° and the minimal stack height should be increased to 6 meters,

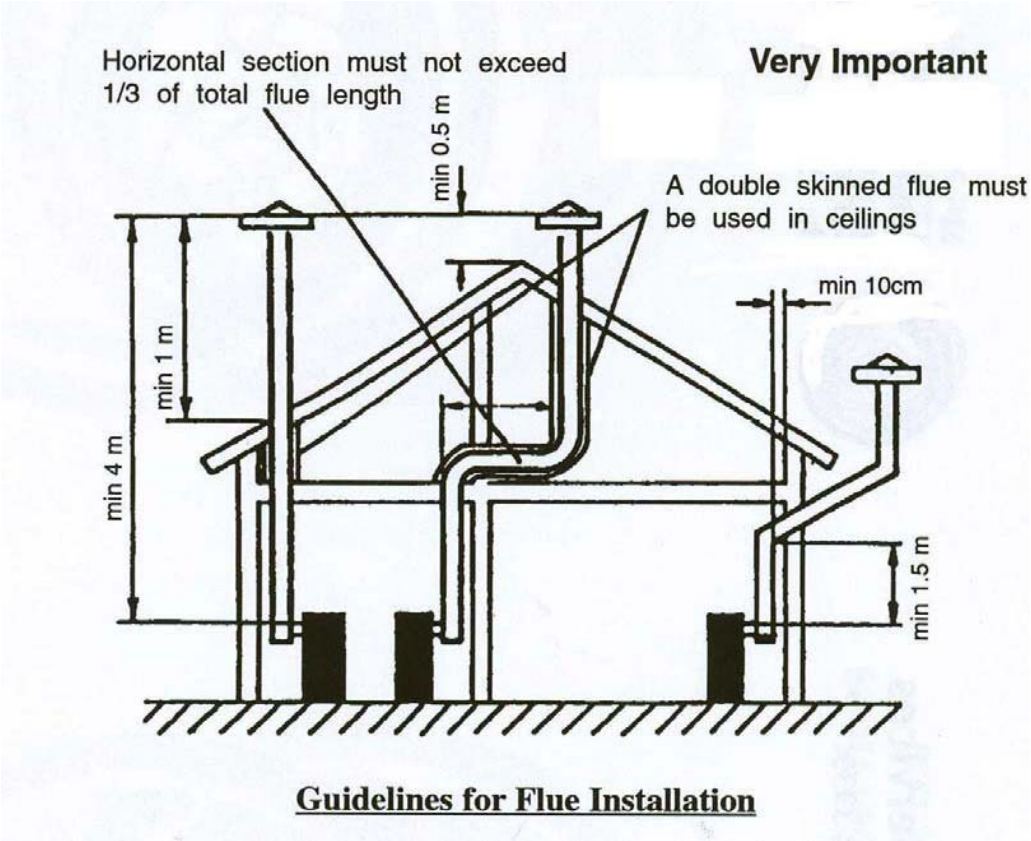

Fig. 4. Flue system

8. Device operation description

Control panel: *The controller of universal oil heater type MTM 52 is equipped with an adjusting knob and two switches, stop and start, which enable the user to control the heater operation, and five light emitting diodes [leds] indicating the operation phase of the device, connected to an alarm in case of a failure.*

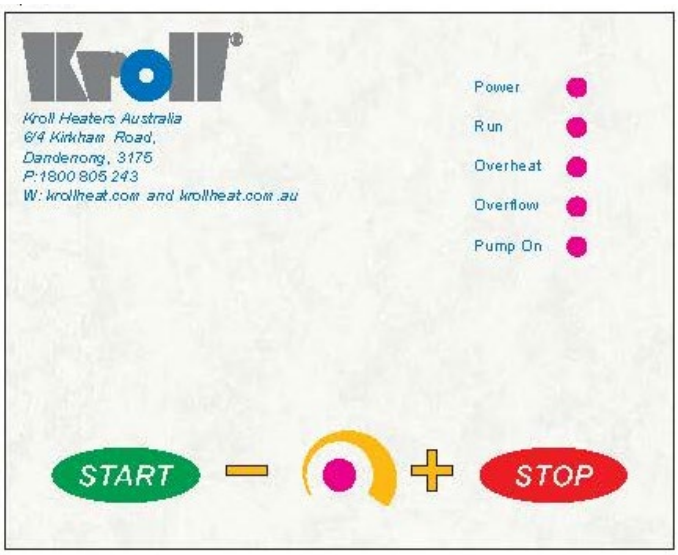

Fig. 5. The front panel of the control module of the universal oil heater.

Automatic heater shutdown may occur due to overheating or overflow of oil

Overheating is sensed by a bimetallic sensor located on the heat exchanger, see fig 6-1. The sensor opens at 100C. The controller then switches the pump off, and indicates this via blinking red led Overheat on the front panel, above. Additionally, an alarm is enabled. The heater fan operates until the furnace temperature falls below 35°C. When this happens, the heater stops.

Then, wait until the heater has cooled down (i.e. the fan has switched off) and press the button on the casing of the bimetallic sensor. Now pressing the Stop button will cause the Overheat led and the alarm to turn off.

The heater may now be switched on again.

The Overflow signal is generated by a micro-switch located under the overflow tank. The contact opening signals that the tank has overflowed. The control system switches the pump off, overflowing is signalled by blinking red led Overflow on the control panel. Additionally, a sound signal is made. The heater fan operates until the furnace temperature falls below 35°C, and the heater stops.

Then, remove the tank guard located on the side enclosure of the device, empty the overflow tank and press the Stop button, which will cause the heating led and the sound signal to turn off. The heater may now be switched on again.

NOTE:

Overheating may occur for a number of reasons such as flue blockage, heat exchanger blockage or using inappropriate fuel types for the Kozy. Overflow would usually occur due to excess ash being in the combustion chamber bottom bowl [see fig 6]

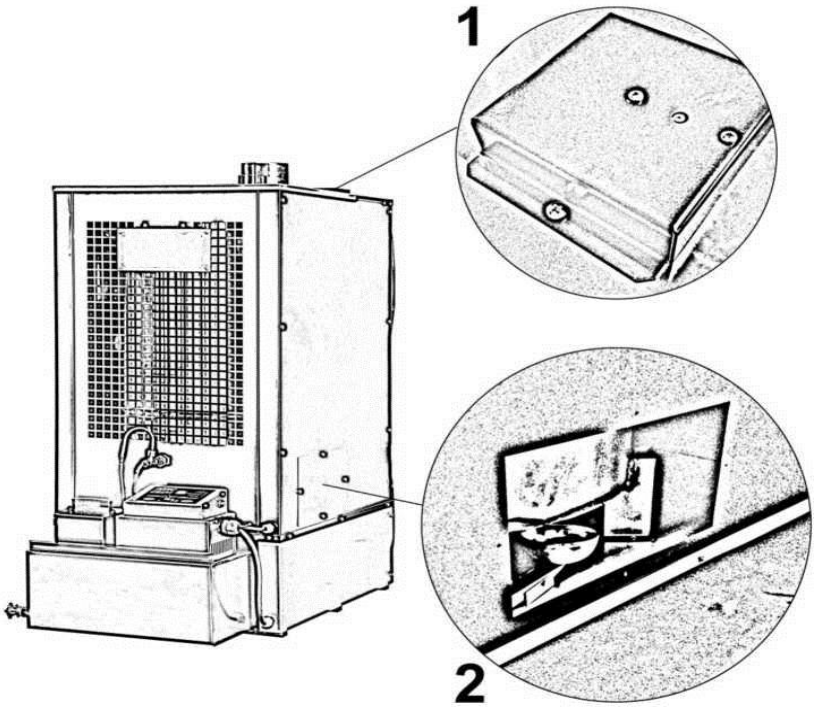

Fig. 6. The distribution of the heater safety components:

1. Control thermostat and STB thermostat
2. Overflow cut-out (micro-switch)

9. Operation

CAUTION
oil must not be poured into the fuel tank during device operation. oil must not be poured into the furnace and it must not be fired up if the furnace chamber or bowl are still hot!!! always wait until the burner plate has cooled down entirely.
failing to follow the above instructions may result in an uncontrolled ignition of oil fumes and scalding. it may also cause destruction of cast iron elements!!!

Starting

While starting the device, the user may stand on the left or right side or in front of the device

- Fill the fuel tank with oil (e.g. used oil) if necessary
- Check whether the feeding pipe (burner) of the device is pushed into the device housing (if not, push it)
- Insert the power plug in the power socket (240vac / 50Hz) the POWER led lights up
- Lift the top cover of the heater up and remove the combustion chamber cover. Then, take the deflector out (if necessary, thoroughly clean the combustion bowl, the base which it is placed on and the entire combustion chamber)
- Check whether the furnace bowl is cool and clean and pour 250 ml of fuel or diesel oil & Install the deflector
- Fire the oil up using paper crumbled into a ball - set it on fire and throw onto the furnace bowl, using the supplied pickup tool
- Replace the combustion chamber cover, fastening it with locks, and close the top cover
- Press the Start button on the control panel (the Run led starts to blink)
- After about 10-15 minutes, depending on the room temperature, the fuel pump and the fan will activate. The Pump led comes on at this time and will blink for 30 minutes The heater will start to operate on the minimal power, regardless of the position of the power regulating knob (30 kW; combustion at ca. 3 l/h).
- After 30 minutes, it will be possible to regulate the heater's power with the regulating knob. [ie: If you want more heat you may now turn the regulating knob fully clockwise] If the knob, at start-up, was in another position than minimum, the device will automatically start operating with the power set by the regulating knob position after 30 minutes. Each press of the Stop button and restarting with the Start button during its operation time will cause the heater to reenter the firing up phase.

Stopping

The heater is switched off by pressing the Stop button on the control panel, which switches off the fuel pump. The heater fan operates until the furnace temperature drops below 35°C . When this happens, the heater returns to the Stop phase. The control panel will have the Power led on at this time.

The device must not be disconnected from the power supply during the fan operation - wait until the heater has cooled down. The heater switches off automatically. Please note that after the device has switched off, the cast iron bowl maintains a higher temperature for some time (depending on the ambient temperature) and heater cannot be fired up again until it cools down!

10. Maintenance

The heater requires little maintenance activity. Following the manufacturer's recommendations will ensure safe and failure-free operation of the device:

- clean the furnace bowl and other combustion chamber elements everyday before firing up. The maximal device operation time without cleaning the bowl is about 7-12 hours (depending on the employed oil intended for combustion)
- check the passability of the overflow pipe (the pipe in the lower part of the combustion chamber, directly over the overflow bowl), clean if necessary.
- clean the combustion chamber base (the element under the furnace bowl) at least once a week
- check whether the air inlet openings in the lower and upper part of the combustion chamber are not blocked
- clean the rubber duct feeding oil onto the furnace bowl at least once a week
- clean the fuel tank and oil pump filter during the heating season
- if the heater is going to be off for a longer time, carefully clean the combustion chamber and the furnace bowl and protect them against corrosion by coating them with a thin layer of oil

CAUTION!!!

- Due to exhaust dust accumulating in the pipe exchanger, it is advisable to clean the lower chamber of the exchanger at least once a year. See page 4 for exchanger location.

11. Faults,Causes & Solutions

In the case of the device failure, the following list may help to determine its location. Generally, its removal is fairly easy. The most frequently occurring problems are listed below. .

NOTE:
Prior to performing any maintenance or repair activity of the device, disconnect its power plug from the power socket.

No.	CAUSE	SOLUTION
1	No power supply.	• Check if the plug is in the socket and check the fuses.
2	Water or deposit in the tank.	• Clean the tank and filter.
3	The pump motor does not turn on.	• Check STB and overflow protection.
4	The motor and pump do not operate.	• The fuel is too thick or too cold. Dilute with diesel oil. • Check the pump control thermostat and replace it if needed. • Check the motor and see if the pump is not soiled on the inside. • Check STB and overflow protection.
5	The fuel ducts is obstructed, oil returns to the tank through the primary duct.	• Clean the fuel duct and replace it if needed.
6	The pump operation control thermostat has not reached proper temperature.	• Wait until the furnace cools down and restart it. • Replace the thermostat.
7	The overflow protection is full.	• Clean it.
8	The safety thermostat (STB) does not operate properly or at all.	• Reset the thermostat by pressing it. • Replace it.
9	Insufficient combustion air supply.	• Clean the furnace chamber openings. • Check proper operation of the fan.
10	Improper draught.	• Check if the stack pipe is mounted according to recommendations entitled: "Stack ducts installation". • Check tightness of the stack system. • Clean if necessary.
11	The stack draught is too strong or alternates too much.	• Install the draught stabiliser and adjust it to min. 2 mm W.C. (19.6 Pa).
12	The stack draught is too weak.	• Check all connections. • Decrease the number of bends. • Elongate the stack. • Insulate the stack pipe outside the building. • Review all information regarding the stack duct in the Manual.

EC DECLARATION OF CONFORMITY

MTM DARIUSZ SEFERYŃSKI
HEATING, VENTILATION, AIR CONDITIONING 04-
239 WARSAW, ul. MŁODNICKA 52 C

I hereby declare that the oil air heater intended for heating industrial rooms without central heating systems:

Rated power of 30-52 kW
Due to its design and structure, meets the basic safety and health requirements set forth in the Directive 2006/42/EC on machinery and has been manufactured according to the directives as follows:

- Directive 2006/42/EC - on machinery (MD)
- Directive 2006/95/EC - on electrical equipment designed for use within certain voltage limits (LVD)
- Directive 2004/108/EC - on electromagnetic compatibility (EMCD)
- Directive 89/106/EEC - on construction products (CPD)

and the following norms:

- EN 1:1998+A1:2007 Fuel oil stoves with vaporising burners and chimney connection
- EN 303-5:1999 Heating boilers - Part 5: Solid fuel heating boilers with manual and automatic fuel charge with rated power of max. 300 KW - Definitions, requirements, testing and marking and labelling.
- EN 953:1997+A1:2009 Safety of machinery - Guards - General requirements for the design and construction of fixed and movable guards
- EN 60204-1:2006+A1:2009+AC:2010 Safety of machinery - Electrical equipment of machines - Part 1: General requirements
- EN ISO 12100:2010 Safety of machinery - General principles for design - Risk assessment and risk reduction
- EN ISO 13732-1:2008 Ergonomics of the thermal environment - Methods for the assessment of human responses to contact with
- surfaces - Part 1: Hot surfaces
- EN ISO 13857:2008 Safety of machinery - Safety distances to prevent hazard zones being reached by upper and lower limbs
- EN ISO 14159:2008 Safety of machinery - Hygiene requirements for the design of machinery
- EN 60335-1:2002+A14:2010 Household and similar electrical appliances - Safety - Part 1:General requirements
- EN 55014-1:2006+A1:2009 Electromagnetic compatibility - Requirements for household appliances, electric tools and similar apparatus - Part 1: Emission
- EN 55014-2:1997+A2:2008 Electromagnetic compatibility (EMC) - Requirements for household appliances, electric tools and similar apparatus - Immunity - Product family standard
- EN 61000-6-1:2007 Electronic compatibility (EMC) - Part 6-1: Generic standards - Immunity for residential, commercial and light-industrial environments
- EN 61000-6-3:2007 Electronic compatibility (EMC) - Part 6-3: Generic standards - Emission standard for residential, commercial and light-industrial environments

The authorisation to compile the machine technical documentation has been given to the representative of the producer:
MTM DARIUSZ SEFERYŃSKI
HEATING, VENTILATION, AIR CONDITIONING 04-
239 WARSAW, ul. MŁODNICKA 52 C
Contact person: Dariusz Seferyński

This declaration pertains only to the machine in condition in which it was launched on the market and does not cover component parts added by the end user or later actions performed by them. This declaration expires if any changes are made to the device that have not been consulted with us.

Dariusz Seferyński
Właściciel

Warsaw, on ..... 20..... (full name and signature of the person authorised to make the